Delphi-X
inverso

euromex
microscopes holland

user manual

Introduction

Thank you for purchasing the Euromex Delphi-X Inverso

The Euromex Delphi-X Inverso microscopes are developed for use in the life science sector. Specific attention to production methods resulted also in an excellent price/performance ratio

Please read this manual carefully before using this product to ensure correct and safe usage

- The content of this manual is subject to change without notice
- The appearance of the actual product can differ from the models described in this manual
- Not all equipment mentioned in this manual has to be part of the set you have purchased
- All optics are anti-fungus treated and anti-reflection coated for maximum light throughput

Contents

General safety instructions

Intended use: a non-medical device

This microscope is intended for general observation of cells and tissues, with transmitted/reflected illumination and with the specimen fixed on a slide

Dangers associated with the operation

- Improper use could result in injury, malfunction or damage to property. It must be ensured that the operator informs every user of existing hazards
- Danger of electrocution. Disconnect the power to the entire lighting system before installing, adding or changing any component
- Not to be used in corrosive or explosive environments
- Avoid direct exposure of eyes to the collimated light beam or direct light from the light guides or fibres
- To avoid a hazard to children, account for all parts and keep all packing materials in a safe place

Photobiological safety LED, important safety instructions

- Avoid direct eye exposure to any LED light source while switched on
- Before looking through the eyepieces of the microscope, lower the intensity of the LED illumination
- Avoid long and high-intensity exposure to LED light because this may cause acute damage to the retina of the eye

Prevention of biological and infectious hazards

Infectious, bacterial or viral biohazard substances under observation may be a risk to the health of humans and other living organisms. Special precautions should be taken during in vitro medical procedures:

- **Biological hazards**: keep a logbook of all the biological substances or pathogenic microorganisms that were under observation with the microscope and show it to everybody before they use the microscope or before they do some maintenance work on the microscope! Agents can be bacterial, spores, enveloped or non-enveloped virus particles, fungi or protozoa
- **Contamination hazard:**
  - » A sample that is properly enclosed with a cover glass never comes in direct contact with the microscope parts. In that case prevention of contamination lies in the handling of the slides; as long as the slides are decontaminated before use and are undamaged and treated normally, there is virtually zero risk of contamination
  - » A sample that is mounted on a slide without cover glass, can come in contact with components of the microscope and may be a hazard to humans and/or the environment. Therefore, check the microscope and accessories on possible contaminations. Clean the microscope surfaces and its components as thoroughly as possible. Should you identify a possible contamination, inform the local responsible person in your organisation
  - » Microscope operators could be contaminated from other activities and cross-contaminate components of the microscope. Therefore, check the microscope and accessories on possible contaminations. Clean the microscope surfaces and its components as thoroughly as possible. Should you identify a possible contamination, inform the local responsible person in your organisation. it is recommended to wear sterile gloves when preparing the slides and handling the microscope in order to reduce contamination by the operator
- **Infection hazard:** direct contact with the focusing knobs, stage adjustments, stage and eyepieces/tubes of the microscope can be a potential source of bacterial and/or viral infections. The risk can be limited by using personal eyeshades or eyepieces. You can also use personal protections such as operation gloves and/or safety goggles, which should be changed frequently to minimize the risk
- **Disinfectant hazards:** before cleaning or disinfecting, check if the room is adequately ventilated. If not, wear respiratory protective gear. Exposure to chemicals and aerosols can harm human eyes, skin and respiratory system. Do not inhale vapours. During disinfection, do not eat, drink or smoke. Used disinfectants must be disposed of according to local or national regulations for health and safety

Disinfection and decontamination:

- Exterior casing and mechanical surfaces must be wiped with a clean cloth, dampened with a disinfectant
- Soft plastic parts and rubber surfaces can be cleaned by gently wiping a clean cloth, dampened with a disinfectant. Discoloration can occur if alcohol is used
- The front lens of eyepieces and objectives are sensitive to chemicals. We recommend not to use aggressive disinfectants but to use lens paper or a soft fibre-free tissue, damped in cleaning solution. Cotton swabs may also be used. We recommend you use personal eyepieces without eyeshades in order to minimize risk
- Never immerse or dip the eyepiece or objective into a disinfectant liquid! This will damage the component
- Never use abrasive compounds or cleaners that may damage and scratch optical coatings
- Properly clean and disinfect all possible contaminated surfaces of the microscope or contaminated accessories before storing for future use. Disinfection procedures must be effective and appropriate
- Leave the disinfectant on the surface for the required exposure time, as specified by the manufacturer. If the disinfectant evaporates before the full exposure time, reapply disinfectant on the surface
- For disinfection against bacteria, use a 70% aqueous solution of isopropanol (isopropyl alcohol) and apply for at least 30 seconds. Against viruses, we recommend to refer to specific alcohol or non-alcohol based disinfection products for laboratories

Before returning a microscope for repair or maintenance through a Euromex dealer, an RMA (return authorization form) together with a decontamination statement must be filled in! This document - available from Euromex for any reseller- must be shipped together with the microscope at all times

Reference documents:
World Health Organisation:
https://www.who.int/ihr/publications/biosafety-video-series/en/
Robert Koch Institut:
https://link.springer.com/content/pdf/10.1007/s00103-013-1863-6.pdf
US Centre for Disease Control and prevention
https://www.cdc.gov/infectioncontrol/guidelines/disinfection/index.html

Handle with care

- This product is a high quality optical instrument. Delicate handling is required
- Avoid subjecting it to sudden shocks and impacts
- Impacts, even small ones, can affect the precision of the instrument

Handling the LED

Note: Always disconnect the power cord from your microscope before handling the LED bulb and power unit and allow the system to cool down approximately 35 minutes to avoid burns

- Never touch the LED with your bare hands
- Dirt or fingerprints will reduce the life span and can result in uneven illumination, lowering the optical performance
- Use only original Euromex replacement LEDs
- The use of other products may cause malfunctions and will void warranty
- During use of the microscope the power unit will get hot; never touch it while in operation and allow the system to cool down approximately 35 minutes to avoid burns

Dirt on the lenses

- Dirt on or inside the optical components, such as eyepieces, lenses, etc., affects the image quality of your system negatively
- Always try to prevent your microscope from getting dirty by using the dust cover, prevent leaving fingerprints on the lenses and clean the outer surface of the lens regularly
- Cleaning optical components is a delicate matter. Please, read the cleaning instructions further on in this manual

Environment, storage and use

- This product is a precision instrument and it should be used in a proper environment for optimal use
- Install your product indoors on a stable, vibration free and level surface in order to prevent this instrument to fall thereby harming the operator
- Do not place the product in direct sunlight
- The ambient temperature should be between 5 to +40°C and humidity should be within 80% and 50%
- Although the system is anti-mold treated, installing this product in a hot, humid location may still result in the formation of mold or condensation on lenses, impairing performance or causing malfunctions
- Never turn the right and left focus knobs in opposite directions at the same time or turn the coarse focus knob past its farthest point as this will damage this product
- Never use undue force when turning the knobs
- Make sure that the microscope system can dissipate its heat (fire hazard)
- Keep the microscope away from walls and obstructions for at least approximately 15 cm
- Never turn the microscope on when the dust cover is in place or when items are placed on the microscope
- Keep flammable fluids, fabrick, etc. well out of the way

Disconnect power

Always disconnect your microscope from power before doing any maintenance, cleaning, assembling or replacing LEDs to prevent electric shocks

Prevent contact with water and other fluids

Never allow water or other fluids to come in contact with your microscope, this can cause short circuiting your device, causing malfunction and damage to your system

Moving and assembling

- This microscope is a relatively heavy system, consider this when moving and installing the system
- Always lift the microscope by holding the main body and base of the microscope
- Never lift or move the microscope by its focusing knobs, stage or head
- When needed, move the microscope with two persons instead of one

Models

The Delphi-X Inverso microscopes come with two widefield eyepieces HWF10x and semi-apochromatic-objectives, as mentioned in table below

Please note: On www.euromex.com you can find the latest updates about Delphi-X Inverso models and accessories

MODELS	LWD Plan phase 10x/20x/S40x objectives	100 W Halogen illumination	10 W LED illumination
DI.1053-PLPHFi	•		•
DI.2053-PLPHFi	•	•	

Eyepiece	Objective	Magnifcation changer	Magnification
10x	4x	1x	40x
10x	10x	1x	100x
10x	40x	1x	400x
10x	60x	1x	600x

Eyepiece	Objective	Magnifcation changer	Magnification
10x	4x	1,5x	60x
10x	10x	1,5x	150x
10x	40x	1,5x	600x
10x	60x	1,5x	900x

Components of the microscope

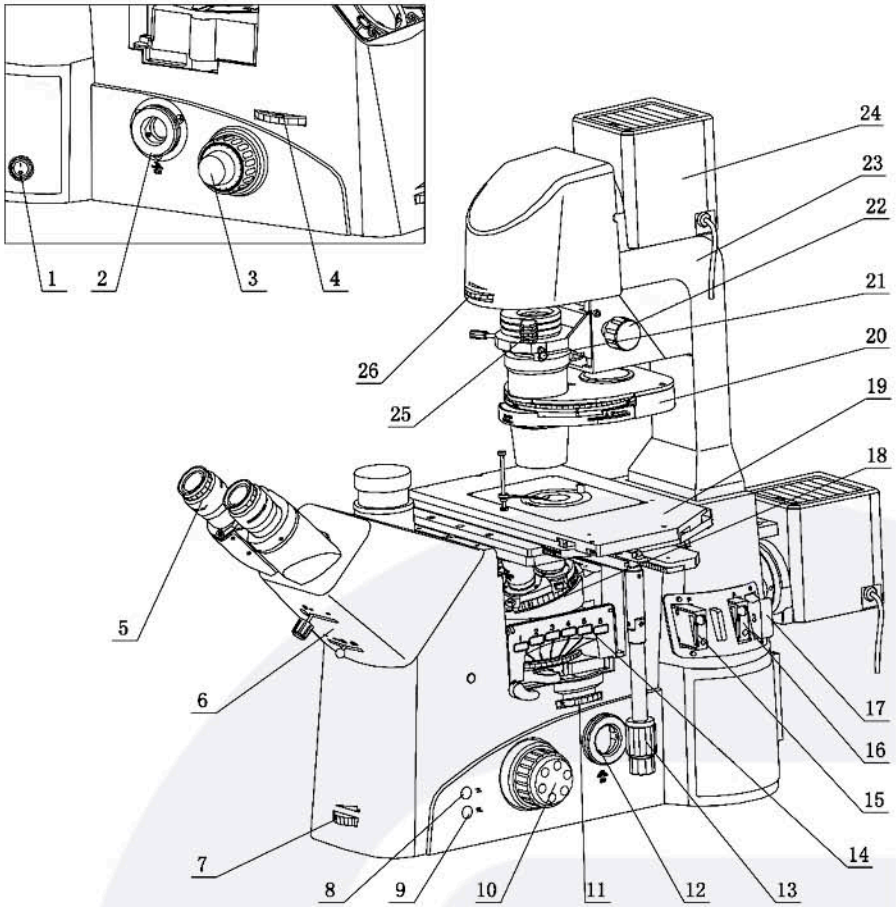

1.	Power switch	2.	Left camera port
3.	Left coarse/fine focusing handwheel	4.	Side port selector wheel
5.	Eyepiece	6.	Trinocular head
7.	Brightness adjustment knob	8.	Transmitted illumination shutter
9.	Reflected illumination shutter	10.	Right coarse/fine focusing handwheel
11.	Magnification changer nosepiece	12.	Right camera port
13.	X/Y axis handwheel of sample stage	14.	Multifunction module turntable
15.	Field diaphragm of reflected light	16.	Aperture diaphragm of reflected light
17.	3-hole filter slider	18.	Objective nosepiece
19.	Sample stage	20.	Turntable condenser
21.	Condenser centering screw	22.	Lifting handwheel of condenser
23.	Transmitted illumination support	24.	12V 100W illumination lamp house
25.	Filter support	26.	Field diaphragm of transmitted light

Preparing the Delphi-X Inverso microscope for use

Carefully remove the items from its packaging and place them on a flat, firm surface. Please do not expose the microscope to direct sunlight, high temperatures, damp, dust or acute shakes. Make sure the table or surface is flat and horizontal

Assembling steps

Euromex Microscopen BV always tries to keep the number of assembly steps for her customers as low as possible but in some cases there are some steps to be taken. The steps mentioned below are often not necessary but described for your convenience nonetheless

Preparation

- Remove the packaging of the body and the accessories. The packaging includes: body, eyepieces, objectives, condenser support, lamp house and other accessories, such as filters, DIC blocks, dust-proof shield, tools and user manual. Some of the mentioned items are optional accessories
- Remove all the packaging, check the goods and confirm whether in accordance with the products you purchased
- Put the body on a steady stage and then dismantle the handle with 4 mm hexagon screwdriver

Note: Store the handle

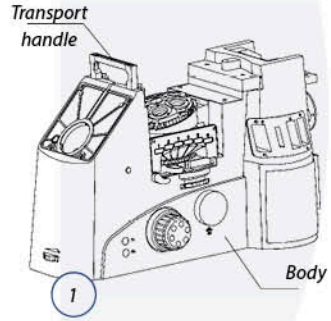

Assembly

1. Trinocular head

- Use a 2 mm hexagon screwdriver to loosen the bolt and remove the dust cover
- Place the trinocular head in the holder, fixate it with the 2 mm hexagon screwdriver

Note: Be carefull not to drop the tube

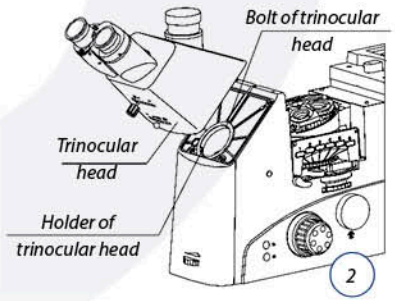

2. Eyepiece and centering telescope

- Remove the dust cover, insert the two eyepieces into the tube (the eyepiece should be pushed all the way down, touching the tube)
- When observing with the phase contrast telescope, replace one eyepiece with the centering telescope

Note: The centering telescope itself can be focused

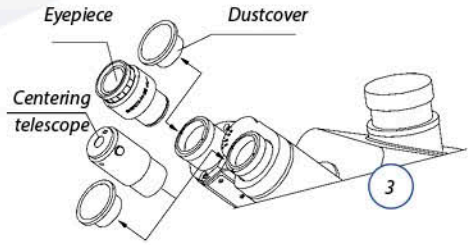

3. Micrometer or crosshairs eyepiece

Rotate the diopter control to focus the scale of the eyepiece

Scales can be exchanged. It is recommended that this is done by a Euromex reseller or technician

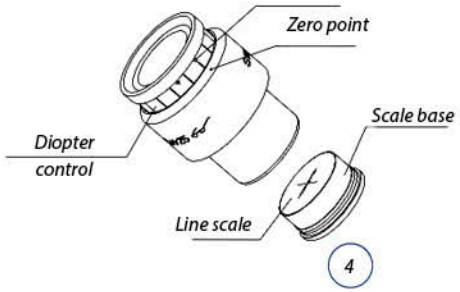

4. Transmitted illumination arm (ill. 5)

Attach the arm to the back of the body and tighten it with the M5 X 35 bolts and spring washers. The transmitted support does not need any adjustments after installation

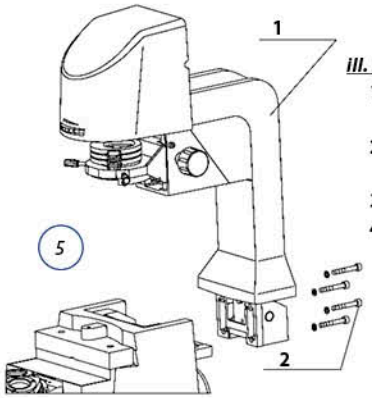

ill. 5 - 6

1. *Transmitted Illumination arm*
2. *Bolt and spring washer*
3. *Dust cover*
4. *Objective*

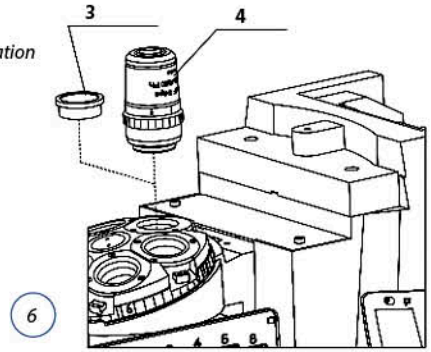

5. Objectives (ill. 6)

Screw off the dust cover on the nosepiece, screw the objectives into the holes of the nosepiece. The objectives should match the marking on the nosepiece by their magnification. Unused holes should be covered by a dust cover

6. Sample stage (ill. 7a)

Assemble the platform on the body using three bolts M4 X 10

- The platform can be assembled at either right or left side. X/Y controls can be places on either side
- The transmitted illumination arm can be tilted a bit to make assembly of the stage easier

Put the stage insert close to the spring on the edge of the platform and press it into the platform levelly (ill. 7b)

ill. 7a

1. *Install bolt*
2. *Stage*
3. *Transmitted Illumination arm*
4. *X/Y adjustments*

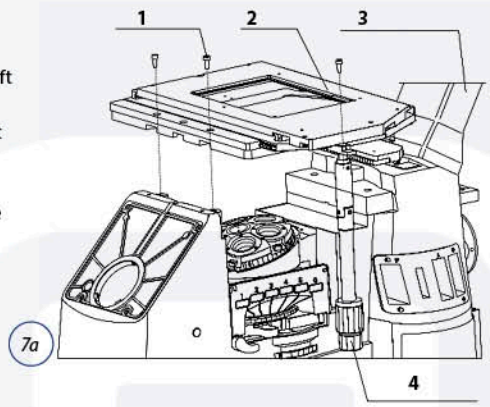

ill. 7b

1. *Stage insert*
2. *Spring*

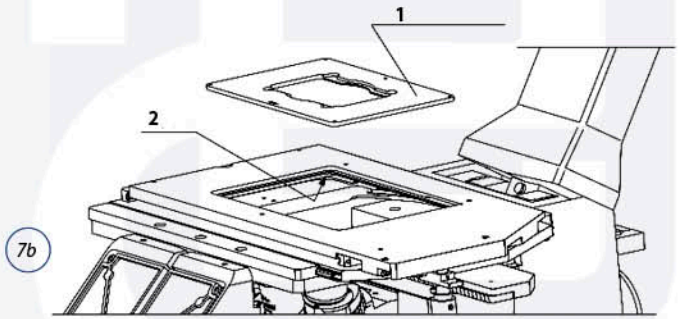

7. Adjustable condenser

Align the guiding dowel of the condenser to the guiding groove of the arm and fix the condenser with the bolts after inserting it into the transmitted illumination arm

ill. 8

1. *Condenser centering bolt*
2. *Guiding dowel*
3. *Guiding groove*
4. *Fixing bolt*
5. *Illumination arm*
6. *Condenser*

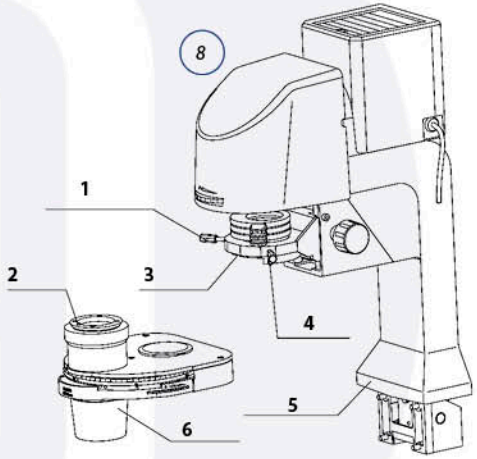

8. Microscope power connector

Please, turn off the power before installing any parts and accessories or doing maintenance

- The transmitted light can be controlled without switching off the device
- The reflective light can be controlled without switching off the device

ill. 9

1. *Transmitted port*
2. *Transmitted/reflected switch*
3. *Indicator light*
4. *Power switch*
5. *Power port*
6. *Reflected port*

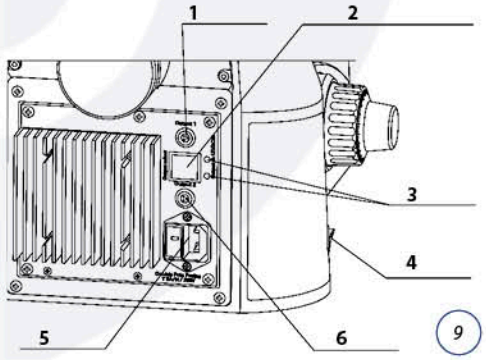

ill. 10

1. *Brightness adjustment knob*
2. *Power light*
3. *Reflected illumination switch*
4. *Lamp house switch*

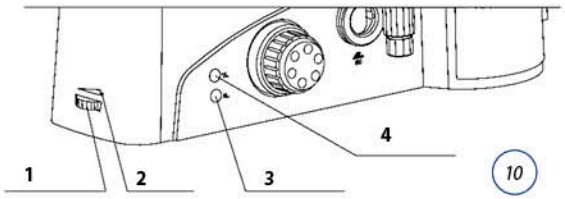

9. Illumination lamp house (halogen)

Place both lamp houses into the holder socket and fix it with the bolt. Connect power wire to the power port (shown in ill. 9)

ill. 12

1. *Holder socket*
2. *Lamp house*
3. *Fixing bolt*

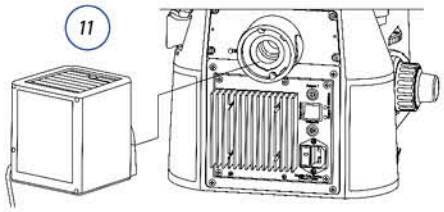

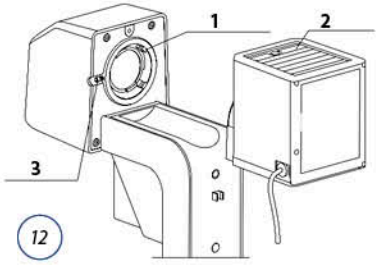

10. Assembling the diffuser

Align the two round grooves of the diffuser to the two bulges on the holder socket and screw the diffuser into the socket groove. Screw it reversely when taking the diffuser out

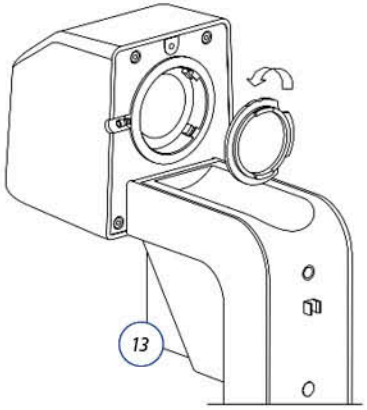

Operation

1. Coarse and fine focusing knobs

- move range: 10 mm
- coarse focusing knobs: 2 mm/rotation
- fine focusing knobs: 0.2 mm/rotation

Focusing knobs are placed at both sides of the body. The left knob has incrementations, the right-knob has no incrementations

ill. 14 - 15 - 16

1. *Fine focusing knobs (incrementations)*
2. *Left port screw thread*
3. *Splitting selector*
4. *Right port screw thread*

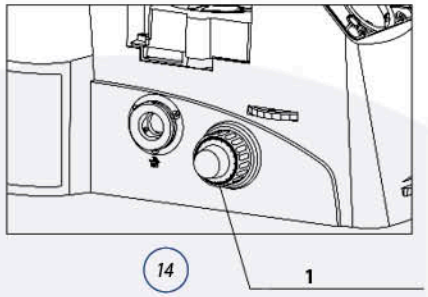

2. Light path selector

The side ports have different splitting ratios (ill. 15 - 16)

	100 % eye: 0 % camera
80	20%eye: 80% right camera
100	0 %eye: 100 % left camera

3. Condenser (transmitted light)

NA:	0.55
WD:	26 mm
Condenser turntable:	6 positions
Brightfield:	H
Phase contrast:	PH1,PH2,PH3
DIC:	DIC, DIC II

ill. 17

1. *Centering bolt*
2. *Aperture diaphragm plate*
3. *Condenser turntable*

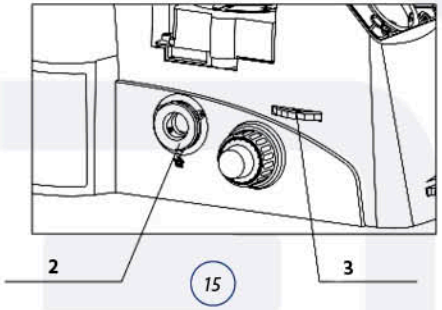

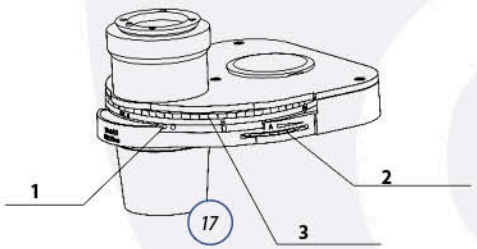

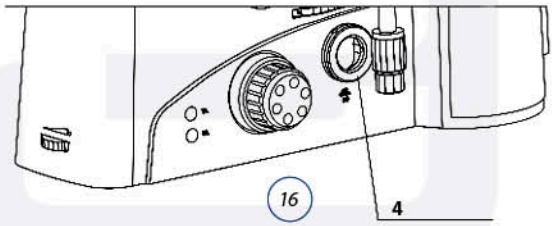

Placing DIC prism

Take out the condenser and put it on a table. Take out the dust cover, screw out the pressure washer with the appropriate tools, and turn over the condenser to let the DIC prism slip off. Put the new DIC prism to the slot of the condenser, screw the pressure washer back in and place the dust cover back into position, shown in ill. 18

attention:

- Mind the orientation of the DIC prism
- Handle prism with care

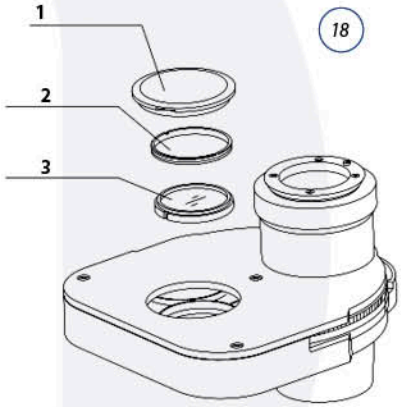

18

ill. 18

1. *Dust cover*
2. *Pressure washer*
3. *Pressure washer*

4. Transmitted light field diaphragm

- When using transmitted illumination, the diaphragm wheel can be rotated to open or close the diaphragm
- The condenser height can be adjusted to user preference
- The condenser centering bolt can be used to center the condenser
- The filter bracket can hold different filters

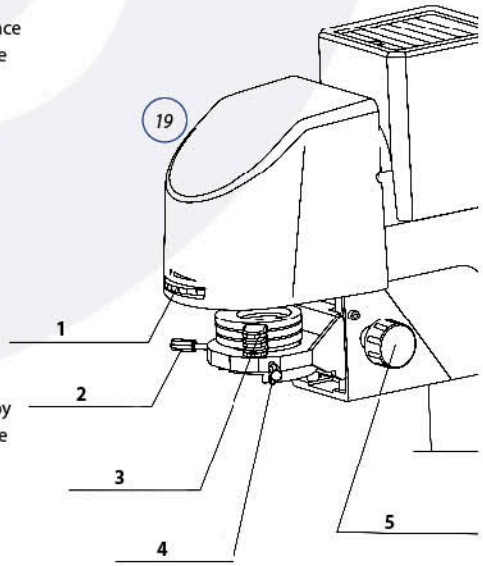

19

ill. 19

1. *Field diaphragm wheel*
2. *Condenser Centering bolt*
3. *Filter bracket*
4. *Fixing bolt*
5. *Condenser height adjustment*

5. Magnification changer

The magnification changer is mark: 1X/1.5X

One can directly convert the magnification with a factor 1.5 by the rotating magnification changer wheel. No need to change objectives

ill. 20

1. *Magnification mark*
2. *Magnification changer wheel*

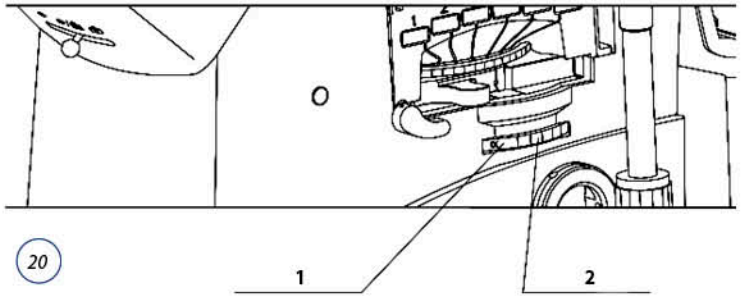

20

6. Multi-functional modules

The multi-functional wheel accepts optional elements. Bought elements are pre-mounted at the factory. To add elements, remove the cover plate, turn down the locking handle and insert or extract a unit into or out of the revolving wheel

ill. 21

1. *Scale cover*
2. *Polarization cover*
3. *Locking handle*
4. *Multi-function wheel*

Install the multi-functional module. Make the module slide along the lower-spring to insert it into the turntable and press the module until locked by the upper-spring

Notice that the module mark should match the number mark on the wheel

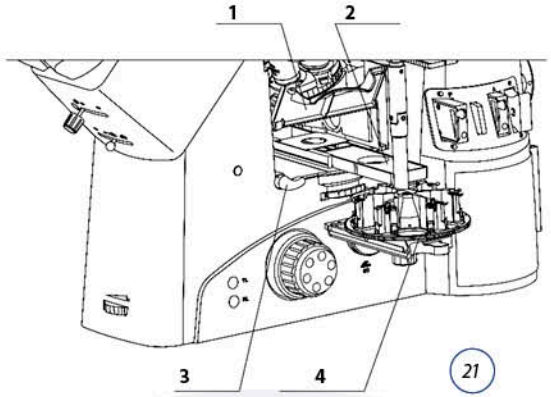

21

ill. 22

1. *Wheel number mark*
2. *Lower-spring*
3. *Upper-spring*
4. *Modules*

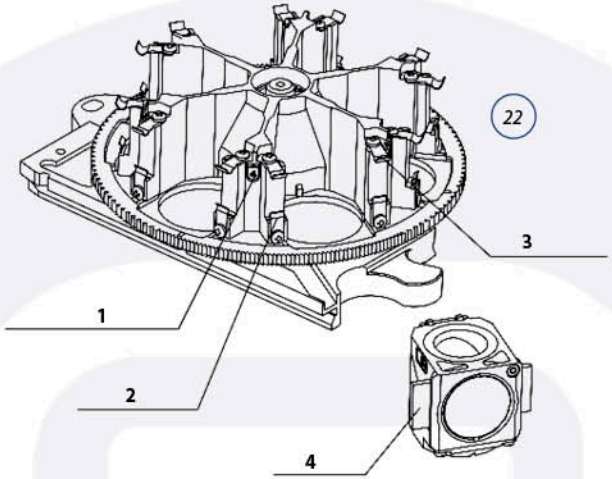

22

7. Aperture diaphragm of the reflected light unit

Adjust the diaphragm by moving the lever

If neccessary, center the diaphragm to the optical path center by adjusting the two centering bolts using a 3 mm hexagon screwdriver

ill. 23

1. *Diaphragm*
2. *Centering bolt*
3. *Lever*

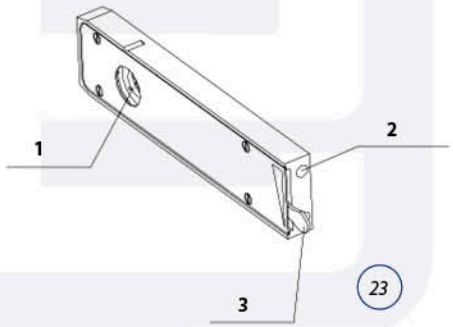

23

8. Trinocular head

The head is equipped with two switches

The first one is used to select the camera light path

	0 % eye / 100 % cam
	50 % eye / 50 % cam
	100 % eye / 0 % cam

The second one is used to focus the Bertrand lens

	100 % visibility
	0
	Bertrand lens

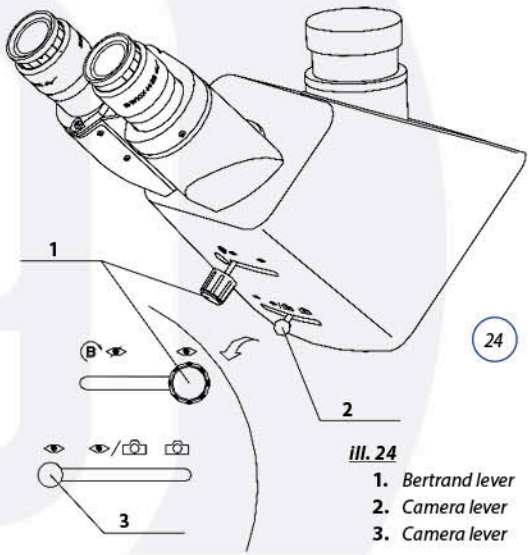

ill. 24
1. *Bertrand lever*
2. *Camera lever*
3. *Camera lever*

Basic observation

Cautions in observation

1. Objective

1. When rotating the nosepiece to change objectives, a click can be heard if the objective is right at the center of the light path
2. when operating, firstly search and focus the sample with a low magnification objective (4X or 10X) and then change to a high magnification objective to observe according to your needs
3. The objectives can also be changed by placing them into the nosepiece through the aperture the aperture in the stage

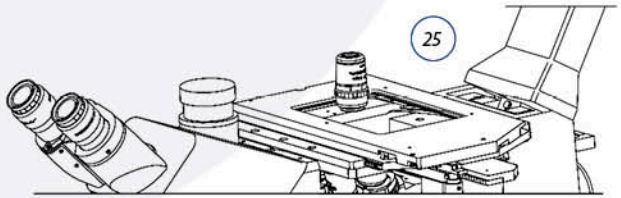

Notice that the magnification should match the scale on the nosepiece. In normal cases when you rotate the nosepiece clockwise, the magnification will get higher

2. Trinocular head

- **Visibility adjustment**
  Observe one eyepiece by one eye and rotate the coarse focusing knobs to focus on sample, then observe the other eyepiece by the other eye. If the image is not clear, use the dioptre control to it clear by both eyes

Note: There are ±5 diopters on the diopter control of the eyepiece, the value which aligns with the dots on the eyepiece holder is the visibility of eyes

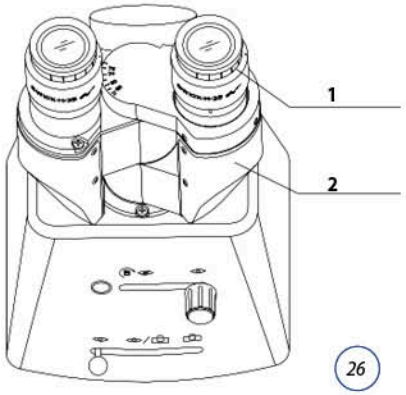

ill. 26
1. *Diopter control*
2. *Tubes*

- **interpupillary distance adjustment**
  Rotate the tubes hinge to adjust the interpupillary distance and unite the field of both eyes, also adjust the height of exit pupil (ill. 27)

Range of pupil distance: 55 - 75mm
The dot marks the value of the interpupillary distance

ill. 28
1. *Interpupillary distance indicator*
2. *Interpupillary distance scale*

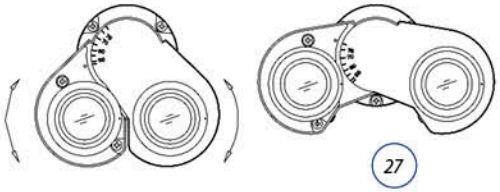

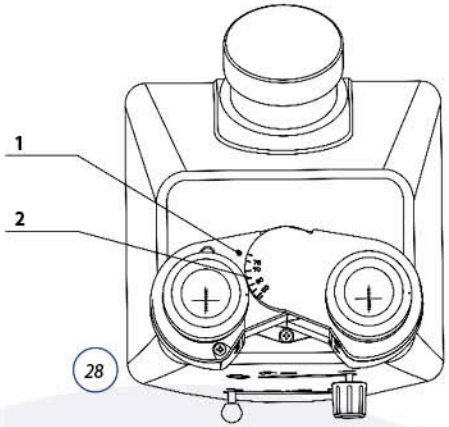

Transmitted illumination

1. Brightfield observation

Basic settings

Trinocular tube:	upper switch , lower switch
Condenser:	H/brightfield
Middle magnification converter:	1X
Multi-functional modules:	transmitted module (number 3 on the module)
Side port converter:	

2. Phase contrast observation

Basic settings

Trinocular tube:	upper switch , lower switch
Condenser:	H1/PH2/PH3
Middle magnification converter:	1X
Multi-functional modules:	transmitted module (number 3)
Side port converter:	

- The magnification of a phase contrast objective should match the condenser phase contrast mark. PH1/10X-20, PH2/40X, PH3/60X
- Centering phase contrast ring shown in ill. 29
  If the phase contrast ring is not centered, use a 1.5 mm hexagon screwdriver to adjust, following the steps below:

» Put a sample on the stage and focus it
» Take out the eyepiece and insert the centering telescope into the eyepiece tube
» Make sure the matched phase contrast ring 2 (in the objective) and phase contrast ring 1(in the condenser) have been placed in the light path
» Observe through the centering telescope, adjusting the phase contrast ring by 1.5 mm hexagon screwdriver until the two centers overlap
» The above method applies to objectives of different magnification

- If the phase contrast ring is not centered properly, the optimal phase effect can't be obtained
- If after removing or placing a thick sample the image quality decreases, repeat the above steps until the two centers overlap
- If the glass slide or vessel is not flat, for a higher contrast, repeat the above steps to adjust to the two centers overlap

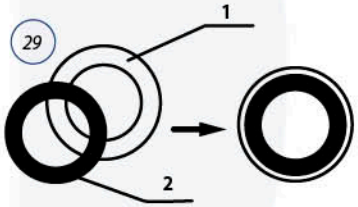

3. Differential Interference Contrast (DIC) observation

Basic settings

Trinocular tube:	upper switch, lower switch
Condenser:	DIC,DICII
Middle magnification converter:	1X
Multi-functional modules:	transmitted module (number 3)
Side port converter:	

The condenser DIC mark should match the DIC prism in the socket of the objective converter

ill. 30
1. *Dust cover*
2. *DIC prism socket*

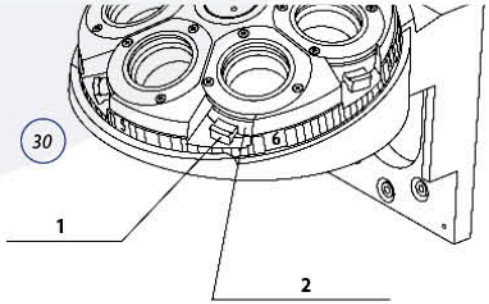

Reflected illumination

1. Brightfield observation

Basic settings

Trinocular tube:	upper switch, lower switch
Middle magnification converter:	1X
Multi-functional modules:	brightfield module (number1)
Side port converter:	

2. Darkfield observation

Basic settings

Trinocular tube:	upper switch, lower switch
Middle magnification converter:	1X
Multi-functional modules:	darkfield module (number2)
Side port converter:	

3. Reflected polarization and cone light observation

Basic settings

Trinocular head:	upper switch B lower switch
Magnification changer nosepiece:	1X
Multi-functional modules:	polarization light module number4/single polarized,5/ polarized, 6/circular polarization light
Side port converter	

4. Vertical fluorescence

Trinocular head:	upper switch, lower switch
Magnification changer nosepiece:	1X
Multi-functional modules:	fluorescence module (B, G, U, V)
Side port converter:	

Microscopy imaging

Side port imaging

ill. 31
1. *Left side port*
2. *Splitting selector*
3. *Right side port*

80	20%eye: 80% right camera
100	0 %eye: 100 % left camera

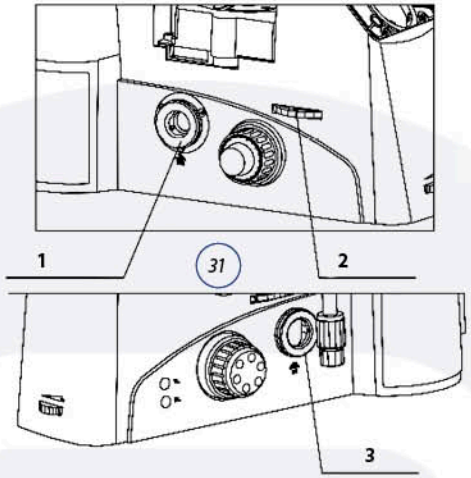

ill. 32a
1. *Trinocular tube port*

Trinocular head imaging

Upper switch:

	100 % eye

Lower switch

/	50 % eye / 50 % camera
	100 % eye / 0 % camera

ill. 32b
2. *Upper switch*
3. *Lower switch*

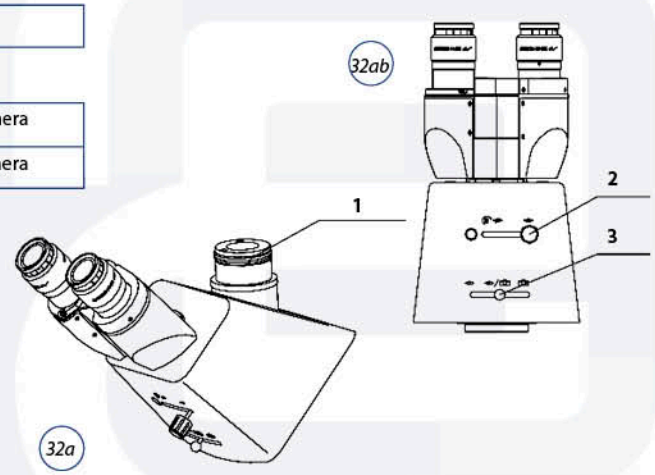

Cleaning optics

How to keep the optics clean?

Dust and dirt particles have a negative effect on the image quality. Keeping the optical system of your microscope clean is essential for the best image quality and overall lifetime of your microscope. Dust and dirt on optical elements, such as lenses, prisms and filters that are left unattended can be become difficult - or even impossible - to remove and may cause mold

Figure a |

- Place your objective or eyepiece on a secure location
- Objectives can be screwed into the cover of an objective case
- Eyepieces can be placed in the microscope box
- Condensers and collector lenses can remain in place in the microscope

Figure b |

- To prevent scratches on coatings and optical glass try to remove dirt and dust that sticks to the optical surface first with an air-blower or with pressurized dry air (oil-free and under moderate pressure version only)

Figure c |

- Use an absorbent lens paper or cotton swap
- Dampen a swap or towel with a small amount of lens cleaning fluid or cleaning mixture (either pure iso-propanol or a mixture of 7 parts ether and 3 parts alcohol)

Figure d |

- Clean the lens by using the tip of the cotton swap or lens paper. Use enough lens paper so that solvents do not dissolve oils from your hands which can make their way through the paper on to the coated surface
- When cleaning a large lens surface, wipe with little pressure from the centre towards the periphery in a circular motion ***Do not use zig-zag motion***
- Discard each lens paper or cotton swap after a single use

Figure e |

- Wait until the cleaning fluid is evaporated, or speed up this process by using pressurized dry air
- Check if the surface is clean by using a magnifying glass
- Place the cleaned item back on the microscope

Please note that cleaning of the optical surfaces indicated in this instruction only applies to external surfaces of objectives, eyepieces, filters and condensers. Internal surfaces must always be done by your Euromex

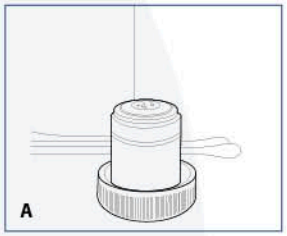

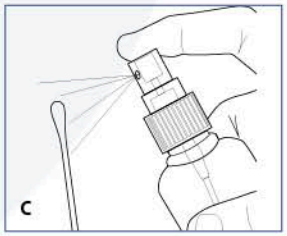

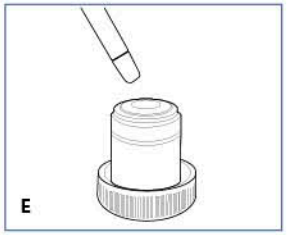

Technical specification

Main technical specification

Optical system	Infinite system
Observe tube	swivelling tube, 45° tilted
Eyepiece	10X widefield eyepiece with 25mm fov
Objective nosepiece	Six-hole nosepiece
Objective	depending on model
Focusing	Coarse and fine coaxial focus Coarse focusing 2 mm/rotation Fine focusing 0.2 mm/rotation (Stroke from the plain focal point: up 2.5 mm, down 7.5 mm
Stage	Range of move: 135 (length) X 80 (width) mm
Illumination	12V 100W halogen tungsten lamp with center preset and and continual brightness adjustment N.A. 0.55
Condenser	Working distance 26 mm, N.A. 0.55
Operating environment	• Used indoor • Max. altitude: 2000 m • Environment temperature5°C~40°C (41°F-109°F) • Max. relative humidity: 80 % at temperature of • 31°C (88°F) decreasing linear with temperature • 70 % at temperature of 34°C (9°F) • 60 % at temperature of 37°C (99°F) • 50 % at temperature of 40°C (104°F) • Pollution level: level 2 • Power supply: ~220 V ± 10 % 50/60 HZ • Consumed power: 100 W • Fuse: T5 A/250 V Φ 5 X 20 mm • Air pressure 80 kPa ~ 106 kPa

Trouble shooting

If trouble occurs, take the proper solution listed by the following chart. If the trouble persists, please contact the sales department of our company

1 Optical part		
Problem	**Cause**	*Solution*
Although the illumination is on, the field of view is still dark	Lamp holder pin has not connected to the illumination device	*Connect them correctly*
	The bulb burns out	*Exchange a new bulb*
	Brightness adjusted too low	*Adjust the brightness properly*
	Too many filters used	*Minimize the filters according to actual needs*
The edge of the field of view has shadow or is not evenly illuminated	The objective nosepiece is not in the correct position	*Make sure the Nosepiece is in the correct position*
	Filter stops in midway	*Push it in completely*
	Phase contrast plate is not in the correct position	*Push the phase contrast plate to the located position*
Dusts or pollution in the field of view	There is dust or pollution on the sample	*Use a clean sample*
	There is dust or pollution on the eyepiece	*Wipe the eyepiece*
There is ghost image	Aperture diaphragm is too small	*Increase the aperture diaphragm*

Resolution troubles: The image is not obvious; The contrast is not good;	The objective nosepiece is not in the correct position	*Make sure the nosepiece is in the correct position*
	Aperture diaphragm is too small or too big in brightfield observation	*Adjust the aperture properly*
	Lenses (condenser, objective, eyepiece or culture dish) is soiled	*Make sure they are fully cleaned*
	The thickness of culture dish bottom is over 1.2mm in phase contrast observation	*Use a culture dish with a thickness of bottom of less than 1.2 mm*
	The brightfield objective is used	*Use a phase contrast objective*
	The condenser ring is not matched the objective ring	*Adjust the condenser ring to match the objective ring*
	The light ring is not centered with phase contrast	*Adjust the centering bolts*
	The objective is not compatible with the phase contrast observation	*Use an objective compatible with the phase contrast observation*
	When observing the edge of the culture dish, the phase contrast ring deviates from the light ring	*Move the culture dish to get the phase contrast effect*
The image blurs at one side	The objective nosepiece is not in the correct position	*Make sure the nosepiece is in the correct position*
	The sample is not correctly positioned on the stage	*Positioned the sample correctly*
	The optical performance (such as the profile) of the culture dish bottom is below standard	*Use a well profiled culture dish*
2 Electrical part		
Bulb does not emit light	No power supply	*Check and connect the power wire*
	Bulb isn't installed correctly	*Install the bulb correctly*
	Bulb is burns out	*Exchange the bulb*
Bulb burns out frequently	Non-indicate bulbs used	*Use indicate bulbs*
Brightness is not enough	Non-indicate bulbs used	*Use indicate bulbs*
	The brightness adjustment knob is not used correctly	*Use it correctly*
The light twinkles	Bulb is nearly burned out	*Exchange the bulb*
	Power wire is badly connected	*Connect the power wire correctly*
3 Observe tube		
The field of one eye does not coincide with the field of the other eye	Interpupillary distance is wrong	*Adjust the pupil distance*
	Diopter is not correctly adjusted	*Adjust the diopter*
	The user's eye has not yet adapted to the microscope observation	*When observing through the eyepiece, observe the whole field of view before concentrating on the sample, it might be beneficial to look up or faraway before observing sample*
4 Microscopy imaging		
Image defocused	Focusing incorrectly	*Adjust the focal length to make the double cross line and sample clearly visible*
Edge of image blurred	The used achromatic objective can not focus the edge	*Blur is inevitable*
The image of window or light appears	Ambient light enters the eyepiece or viewfinder and is reflected	*Cover the eyepiece and photo port of the system*

Euromex Microscopen bv • Papenkamp 20 • 6836 BD Arnhem • The Netherlands
T +31 (0) 26 323 22 11 • info@euromex.com • www.euromex.com